PRODUCT SPEC SHEET

Perforated Pre-Galvanised

KENTON CODE
K075G

R15 T21 · 15mm round hole · 21mm staggered pitch · 46% open area

Photo

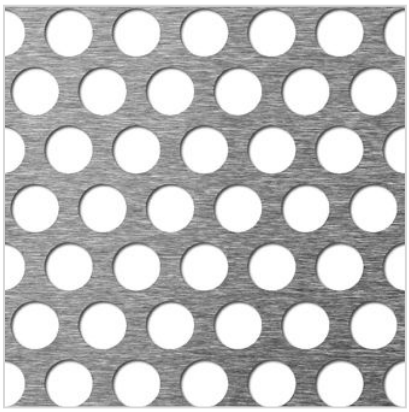

Hole layout

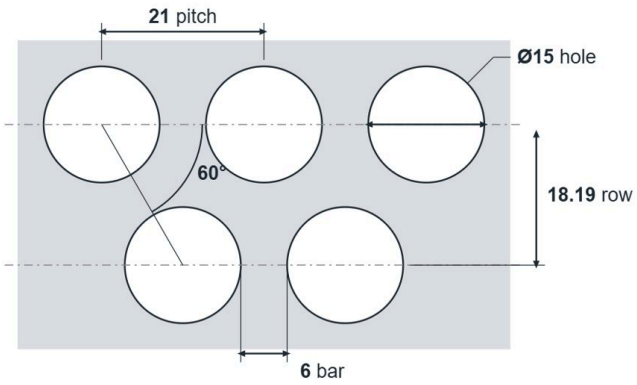

Enlarged, not to scale. Dimensions in mm.

Specification

Kenton code	K075G
Hole	15mm round
Pitch	21mm staggered 60°
Row spacing	18.19mm
Bar between holes	6mm
Open area	46%
Holes per m²	2,620
Thickness	1–3mm
Material	Pre-galvanised

Stock and sheet sizes

Pre-galvanised	2000 x 1000	2500 x 1250	3000 x 1500	kg/m²
1.0mm	5-7 days	5-7 days	5-7 days	4.2
1.5mm	5-7 days	5-7 days	5-7 days	6.3
2.0mm	5-7 days	5-7 days	5-7 days	8.4
3.0mm	5-7 days	5-7 days	5-7 days	12.7

Shaded = in stock. 5-7 days = made to order. Blank = not a standard size. Sizes in mm.

This pattern also comes in

Mild steel | Aluminium | Stainless 304 | Stainless 316

We can also

Cut to size, folded, rolled and fabricated to your drawing. Other hole sizes, pitches and sheet sizes made to order.

Get a price

Call **0117 963 4579** or email **holes@kentons.biz** with the code, thickness, sheet size and quantity.

Please note. Dimensions are nominal and weights are approximate, for guidance only. Please confirm suitability for your application. Stock changes daily, so please call to confirm availability.