PRODUCT SPEC SHEET

Perforated Aluminium

KENTON CODE
K080A

R20 T28 · 20mm round hole · 28mm staggered pitch · 46% open area

Photo

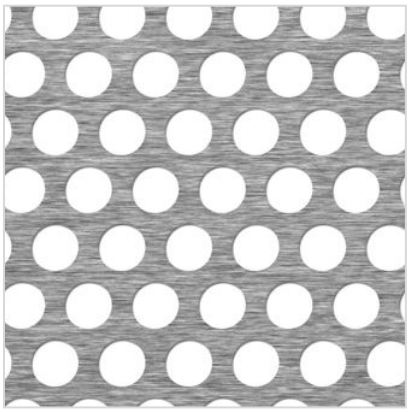

Hole layout

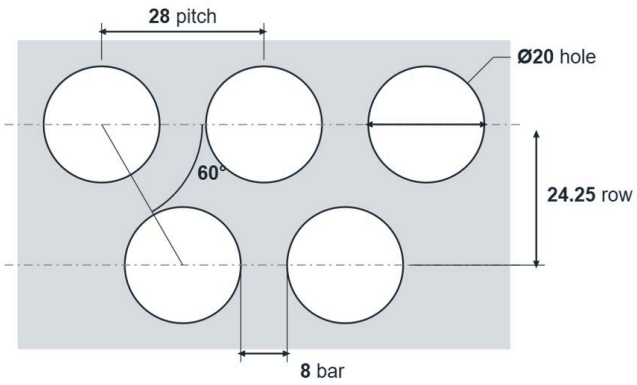

Enlarged, not to scale. Dimensions in mm.

Specification

Kenton code	K080A
Hole	20mm round
Pitch	28mm staggered 60°
Row spacing	24.25mm
Bar between holes	8mm
Open area	46%
Holes per m²	1,470
Thickness	1–3mm
Material	Aluminium

We can also

Cut to size, folded, rolled and fabricated to your drawing. Other hole sizes, pitches and sheet sizes made to order.

Get a price

Call **0117 963 4579** or email **holes@kentons.biz** with the code, thickness, sheet size and quantity.

Stock and sheet sizes

Aluminium	2000 x 1000	2500 x 1250	3000 x 1500	kg/m²
1.0mm	5-7 days	5-7 days	5-7 days	1.5
1.5mm	5-7 days	5-7 days	5-7 days	2.2
2.0mm	5-7 days	In stock	5-7 days	2.9
3.0mm	5-7 days	5-7 days	5-7 days	4.4

Shaded = in stock. 5-7 days = made to order. Blank = not a standard size. Sizes in mm.

This pattern also comes in

Mild steel | Pre-galvanised steel | Stainless 304 | Stainless 316

Please note. Dimensions are nominal and weights are approximate, for guidance only. Please confirm suitability for your application. Stock changes daily, so please call to confirm availability.