PRODUCT SPEC SHEET

Perforated Stainless 304

KENTON CODE **K080S**

R20 T28 · 20mm round hole · 28mm staggered pitch · 46% open area

Photo

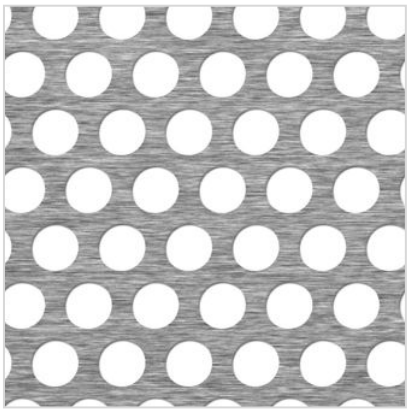

Hole layout

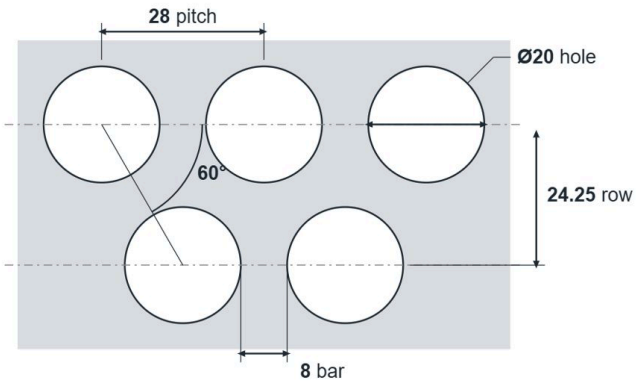

Enlarged, not to scale. Dimensions in mm.

Specification

Kenton code	K080S
Hole	20mm round
Pitch	28mm staggered 60°
Row spacing	24.25mm
Bar between holes	8mm
Open area	46%
Holes per m²	1,470
Thickness	1–3mm
Material	Stainless 304

Stock and sheet sizes

Stainless 304	2000 x 1000	2500 x 1250	3000 x 1500	kg/m²
1.0mm	5-7 days	5-7 days	5-7 days	4.3
1.5mm	5-7 days	5-7 days	5-7 days	6.4
2.0mm	In stock	In stock	5-7 days	8.6
3.0mm	5-7 days			12.9

Shaded = in stock. 5-7 days = made to order. Blank = not a standard size. Sizes in mm.

This pattern also comes in

Mild steel · Aluminium · Pre-galvanised steel · Stainless 316

We can also

Cut to size, folded, rolled and fabricated to your drawing. Other hole sizes, pitches and sheet sizes made to order.

Get a price

Call **0117 963 4579** or email **holes@kentons.biz** with the code, thickness, sheet size and quantity.

Please note. Dimensions are nominal and weights are approximate, for guidance only. Please confirm suitability for your application. Stock changes daily, so please call to confirm availability.